FV-28NX3

Three Phase Series

- Long life condenser motor with thermal cut-off
- Fan casing with tapered scroll
- Embedded terminal box
- Noise absorption material adopted
- Compact size



Dimension

Unit : mm

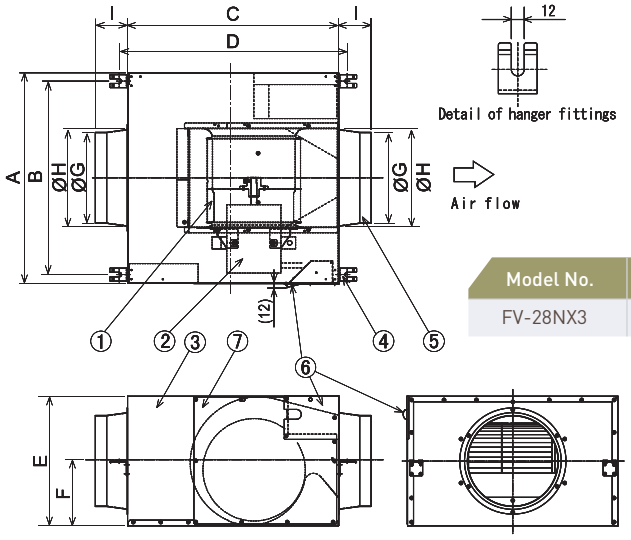

Model No.	A	B	C	D	E	F	G	H	I
FV-28NX3	554	510	557	601	342	171	240	255	85

Performance Data

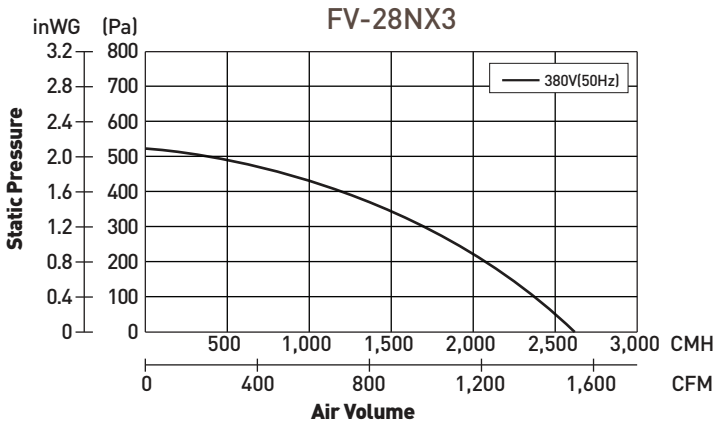

Specification

Model No	Phase	Voltage	Air Volume		Speed	Consumption	Noise	Weight	Duct Size	Impeller Diameter
			[CMH]	[CFM]	[RPM]	[W]	[dB(A)]	[Kg]	[mm]	[mm]
FV-28NX3	3	380	2,600	1,530	1,295	600	44	28	Ø250	280

Note:
1.The values of rated input, air volume and noise are specified at the static pressure of 0 Pa.
2.The values of noise level are measured at 1.5m apart from the side of the fan body when ducts are connected on both inlet and outlet side. It's on the assumption that the noise of fan body propagates to the room inside.
3.The values of noise level is A weight average sound pressure level, the mean value is measured by our company
4.The value in Specification tables are representative characteristic value at 220V, 50Hz.

The disclaimer : * AMCA (Air Movement and Control Association International, Inc.) certifications have been obtained for the models designed for 220V/60Hz and 240V/50Hz. For further details, please refer to: https://www.amca.org/certified-listed/products.html?c=2663