Panasonic





INDUSTRIAL VENTILATING FAN

HIGH PERFORMANCE | LOW-NOISE | DURABLE

Industrial Ventilating Fans can be used in factories, warehouses, shops, commercial kitchens and other places where large air change is necessary. High Pressure Series is applicable for places being ventilated by duct pipe through which static pressure is relatively high.

HIGH STATIC PRESSURE, LOW POWER CONSUMPTION

The unique design of wave-shaped blade and bellmouth construction enable better performance in high static pressure and low power consumption.

LOW-NOISE DESIGN

The blade's distinctive wave-shaped is developed by application of hydrodynamic analysis. It can deliver a smooth and turbulence free airflow, meaning the performance in big air volume but with less noise.

IMPROVED DURABILITY

Pressure is distributed more uniformly over the surface of the blade, making it more durable. A special polyester resin powder coating gives a beautiful color and a highly rust-resistant finishing.

FANS WITH 3-DIMENSIONAL WAVE-SHAPED CROSS SECTION BLADE





INDUSTRIAL VENTILATING FAN

FV-40KAU1



- With shutter
- Durable powder coating for rust resistance
- High performance condenser motor with thermal cut-off
- Operable at an ambient temperature range from -10°C to +50°C

DIMENSION
(Unit: mm)

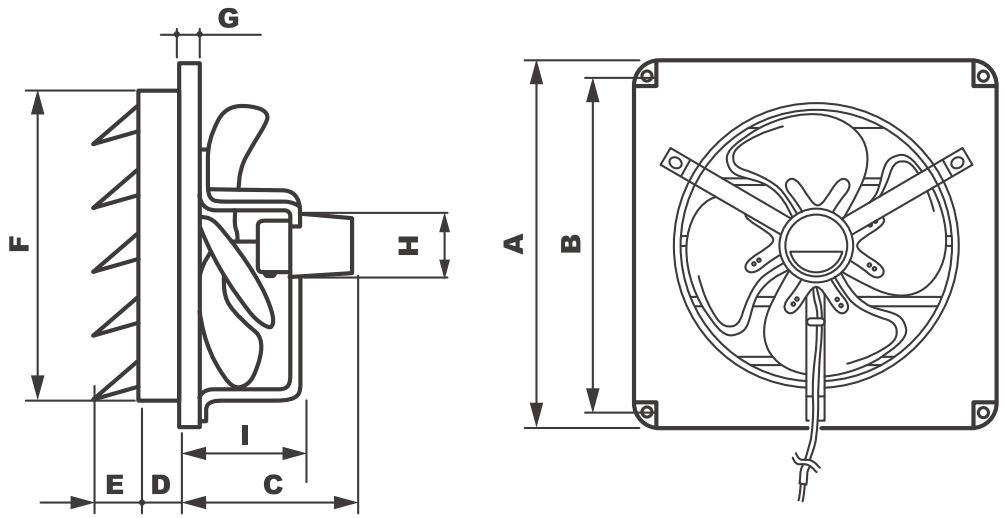

NO	DIMENSION
A	510
B	480
C	215
D	40
E	55
F	434
G	10
H	126
I	130

SPECIFICATION

Voltage [V]	Frequency [Hz]	Air Volume		Current [A]	Input [W]	Noise [dB (A)]	Speed [RPM]	Weight [kg]	Installation Space W x L [mm]
		m^3/h	ft^3/min						
220*		2010	1183	0.290	59.0	59.0	1230 ~ 1370		
220	50	1880	1105	0.260	47.0	51.0	1230 ~ 1370		
230		1920	1130	0.270	52.0	51.0	1250 ~ 1390	6.4	444 x 444
240		1960	1151	0.290	59.0	51.0	1270 ~ 1410		
230	60	2130	1254	0.310	67.0	52.5	1400 ~ 1540		

*** Performance data for Thailand market only. Data are measured by using motor and capacitor which are optimized for single phase 220V 50Hz.**

1. RPM data is for reference only. Values may vary depending on different conditions.
2. The value of power consumption, air volume and noise are specified at the static pressure of 0 Pa.
3. The value of air volume is the mean value which is measured by our company.
4. The value of noise level is measured at 1m apart from the left, the right and the front of product, then get the average of three values.
5. The value of noise level is A weight average sound pressure level, the mean value is measured by our company.

PERFORMANCE DATA

220V(50Hz)* Thailand market only

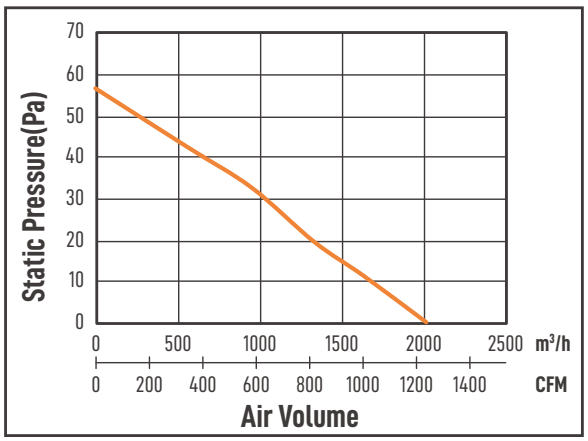

220V(50Hz)

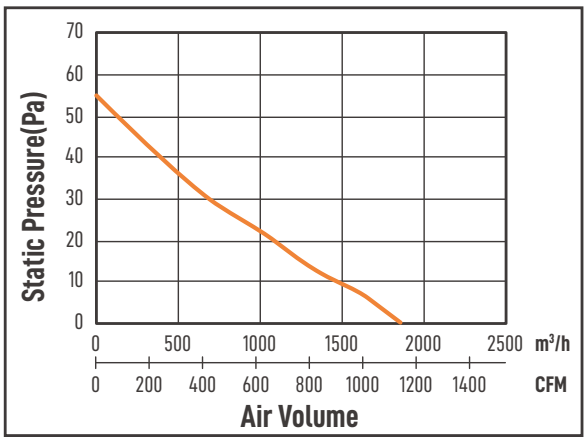

230V(50Hz)

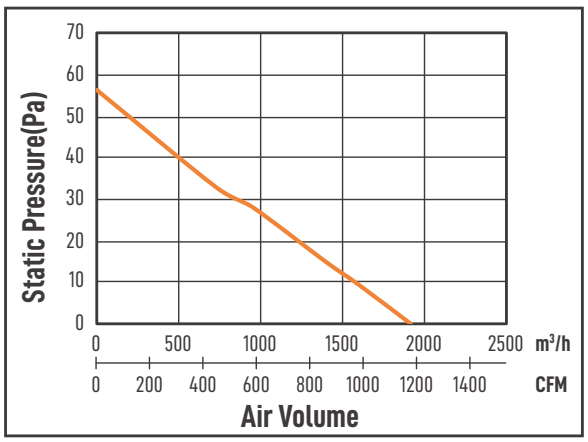

240V(50Hz)

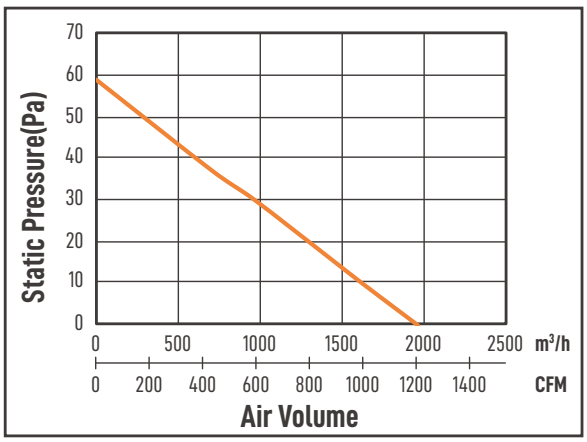

230V(60Hz)

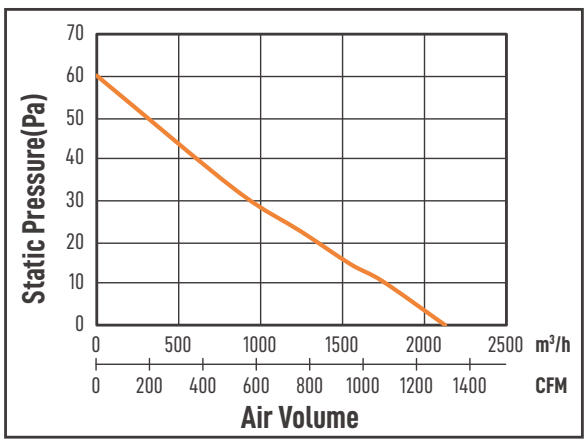

* **Performance data for Thailand market only. Data are measured by using motor and capacitor which are optimized for single phase 220V 50Hz.**

Panasonic

Panasonic Ecology Systems Co., Ltd
http://www.peshk.panasonic.hk/

-Actual colors may vary slightly from those shown.
-Specifications are subject to change without prior notice.

CATALOG NO: P-VF024
Printed in Hong Kong 07.23