Panasonic

Living in
Fresh Environment

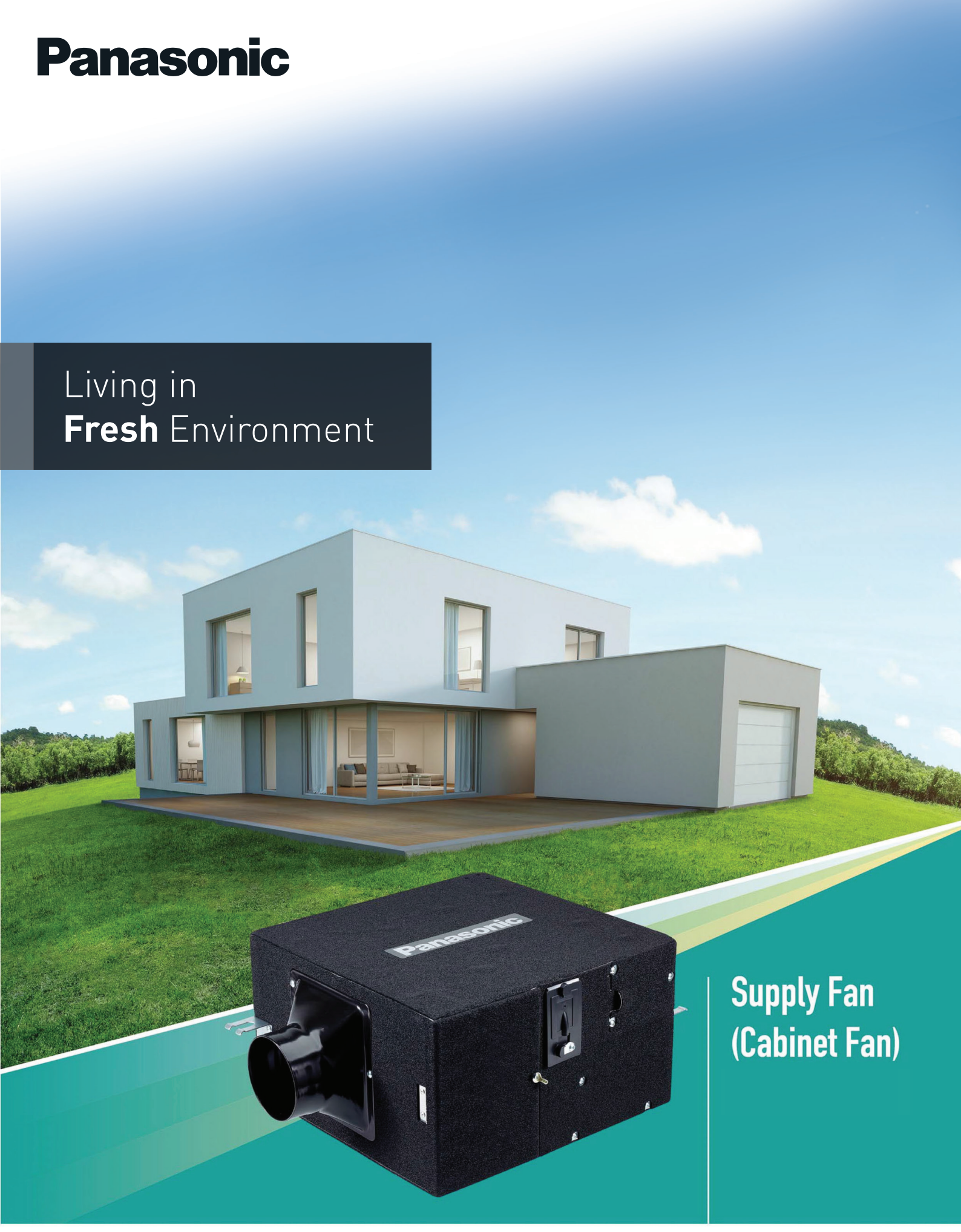

Supply Fan (Cabinet Fan)

PURIFY PM2.5

Supply Ventilation

A Better Life, A Better World

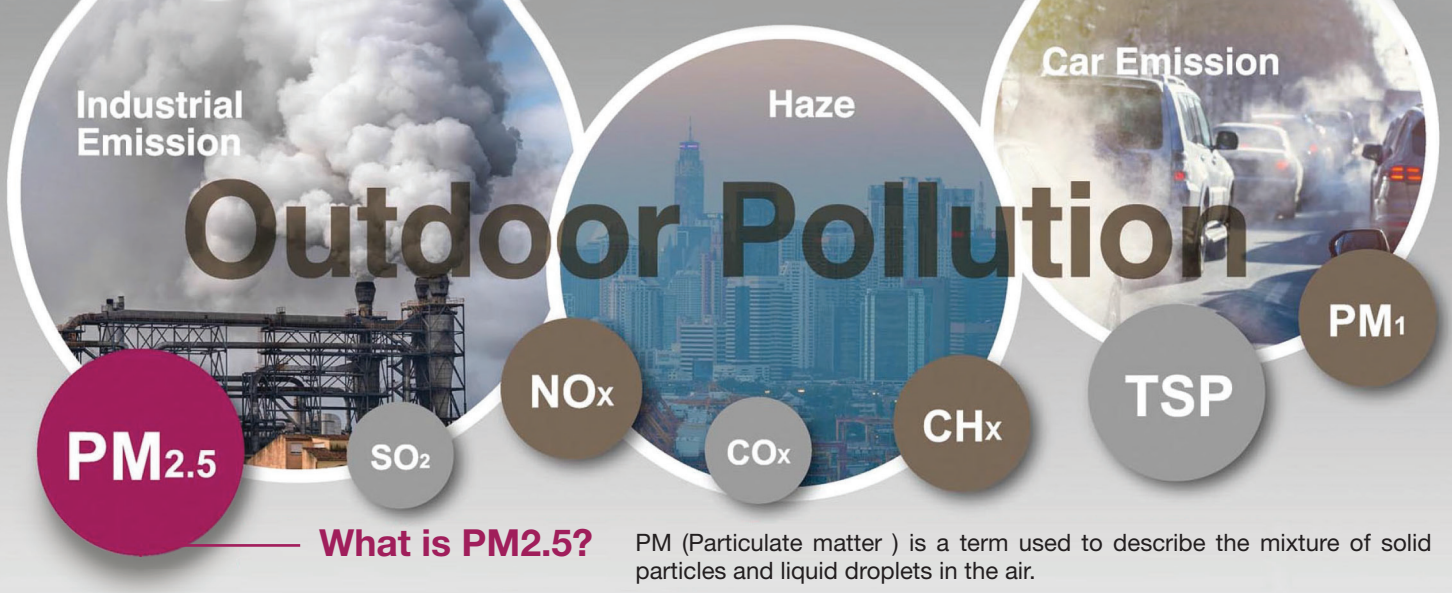

What is PM2.5?

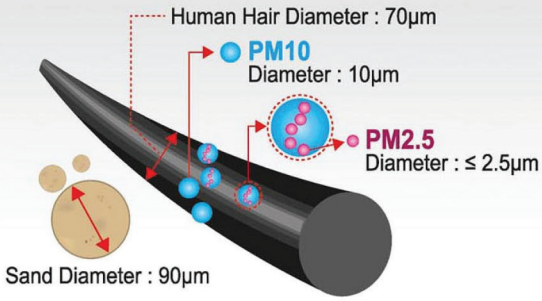

PM (Particulate matter) is a term used to describe the mixture of solid particles and liquid droplets in the air.

PM2.5 refers to atmospheric particulate matter that have a diameter less than 2.5 micrometers. Often described as fine particles, they are up to 30 times smaller than the width of a strand of human hair.

Since they are so small and light, fine particles tend to stay longer in the air than heavier particles. This increases the chances of humans inhaling them into the bodies. Owing to their minute size, PM2.5 have the ability to bypass the nose and throat and penetrate deep into the lungs and some may even enter the circulatory system.

Fine particles are also known to trigger or worsen chronic conditions such as asthma, heart attack, bronchitis and other respiratory problems.

Achieve Indoor Air Quality (IAQ) by Supply Ventilation

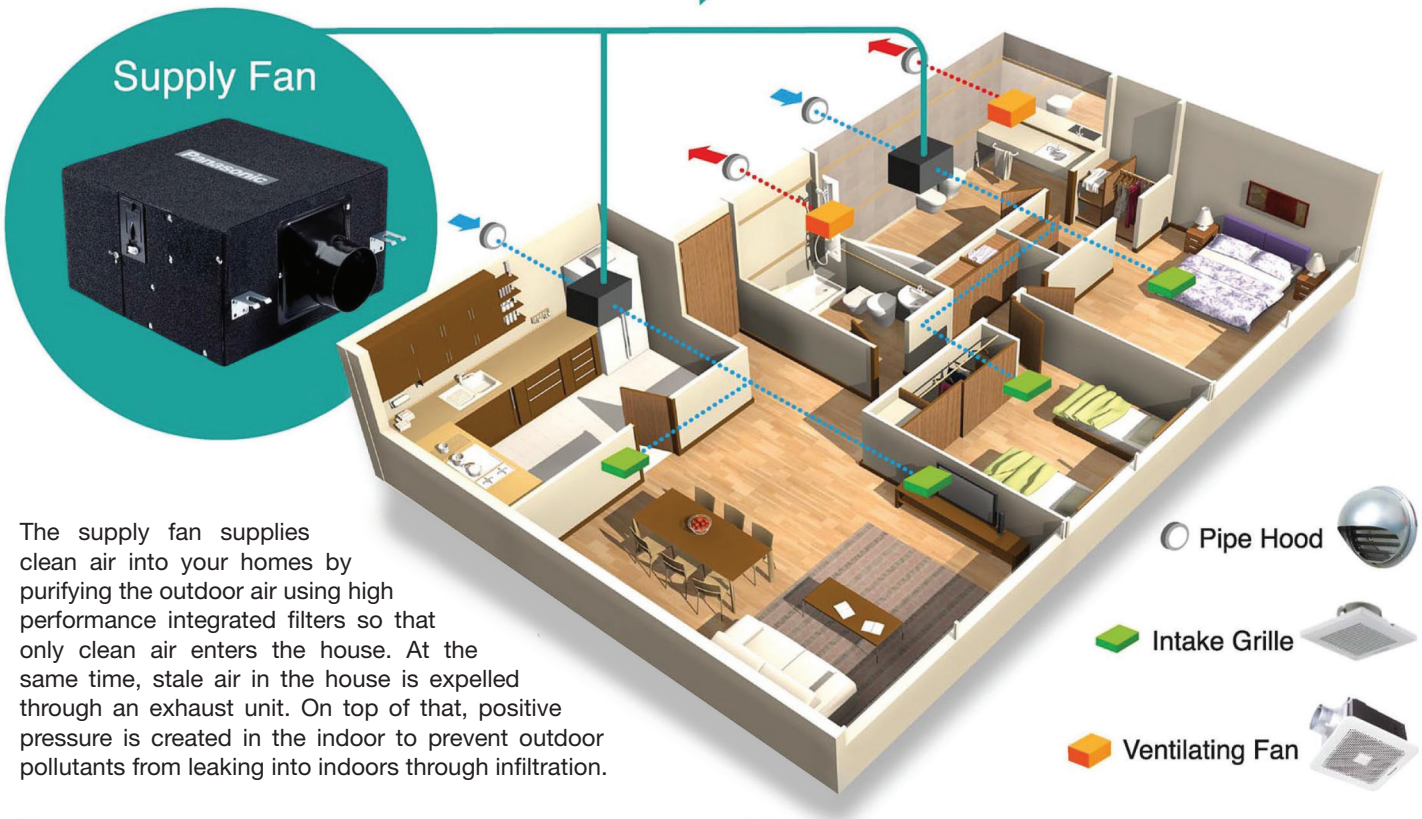

The supply fan supplies clean air into your homes by purifying the outdoor air using high performance integrated filters so that only clean air enters the house. At the same time, stale air in the house is expelled through an exhaust unit. On top of that, positive pressure is created in the indoor to prevent outdoor pollutants from leaking into indoors through infiltration.

Second Type : Ventilation by supply air

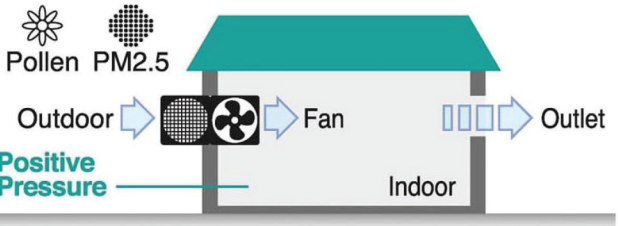

Third Type : Ventilation by exhaust air

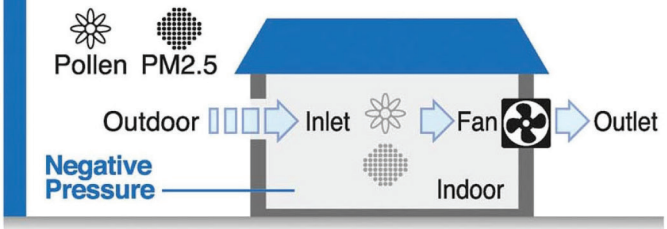

Features

Energy Efficient

- Operates in DC (Direct Current) motor and uses less energy.
- Temperature rises in DC motor is lower than AC (Alternative Current) motor which allows a longer lifetime for DC motor

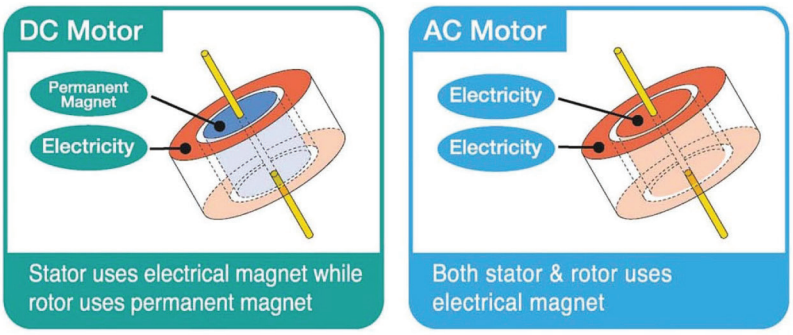

IAQ Panel Connection Port

(Only applicable for FV-01NAP1)

Connection port available to link with IAQ panel to control the supply fan



Effective Filtration

- **Pre-filter** - Helps to capture large particles such as dust and insects from entering the house
- **PM2.5 filter** – Traps fine particles such as PM2.5 particles.

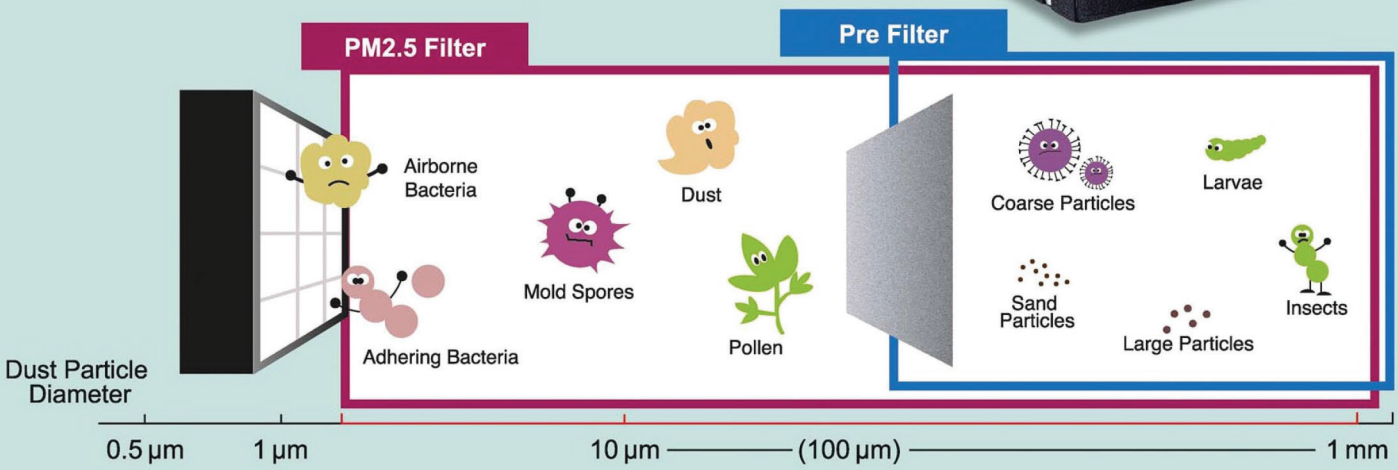

Low Noise Structure

Unique mounting structure for the motor to reduce vibration during operation and reduces the noise during operation.

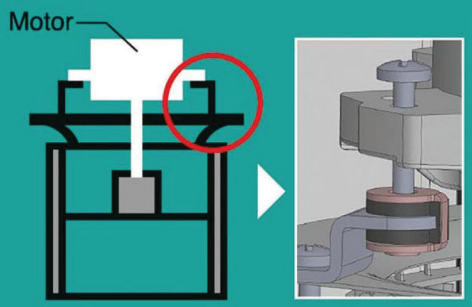

IAQ Panel

(Applicable for FV-01NAP1 model)

Features Available in the IAQ Panel Connection :

1. Able to view the temperature, humidity and PM2.5 and C02 level in the room.
2. Filter maintenance indication
3. Available functions selection for operation:
   - Auto (Automatically adjusts speed based on PM2.5 and C02 level)
   - Manual (Sequential 5 speed selection)
   - Silent Mode (For quiet operation)

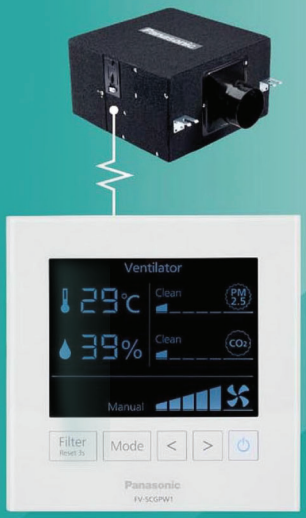

Supply Fan (Cabinet Fan)



Features

- DC (Direct Current) motor
- Low noise structure
- Pre filter to capture large particles
- PM2.5 filter traps fine particles
- Compact size with embedded terminal box
- 2 speed selection
- IAQ panel connection port (Applicable for FV-01NAP1)

FV-01NAP1

Dimension

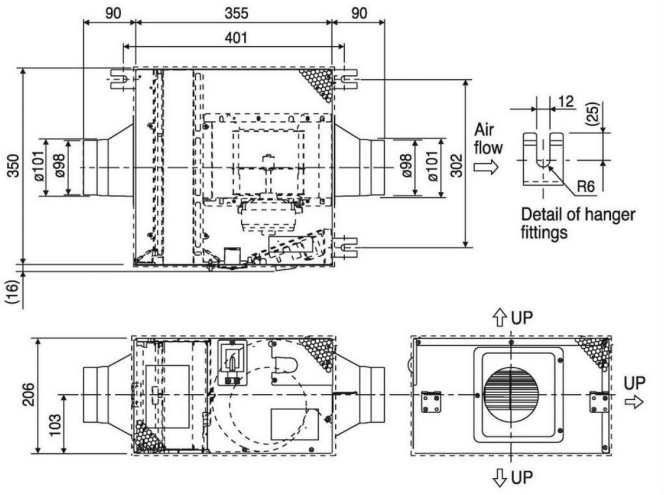

Performance Data

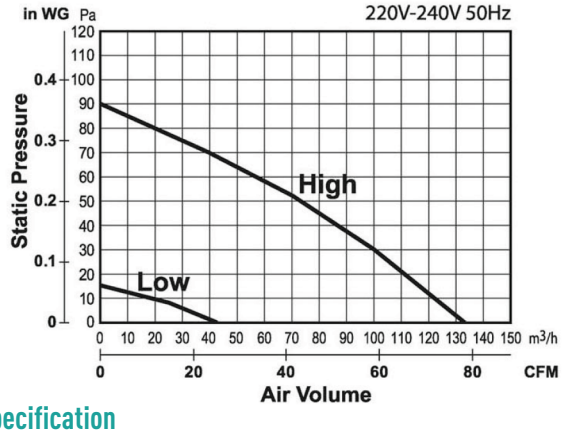

Specification

Voltage			Air Volume		Consumption	Noise	Weight	Duct Size
[V]	[Hz]		[m³/h]	[CFM]	[W]	[dB(A)]	[kg]	[mm]
220 - 240	50	Hi	133	78	10	23	6.9	Ø100
		Lo	42	25	3.3	18		

FV-02NJP1

Dimension

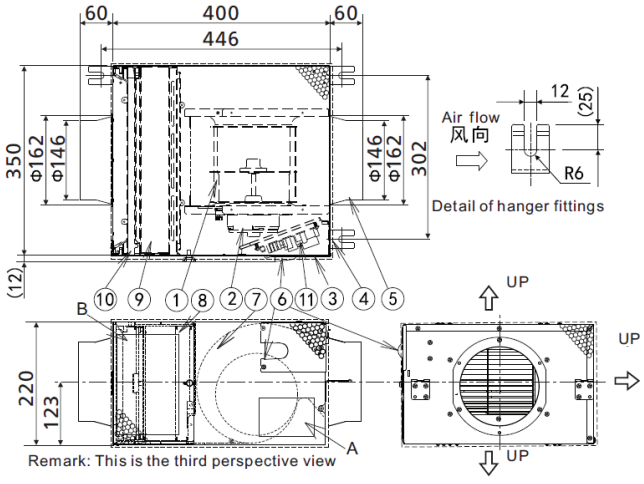

Performance Data

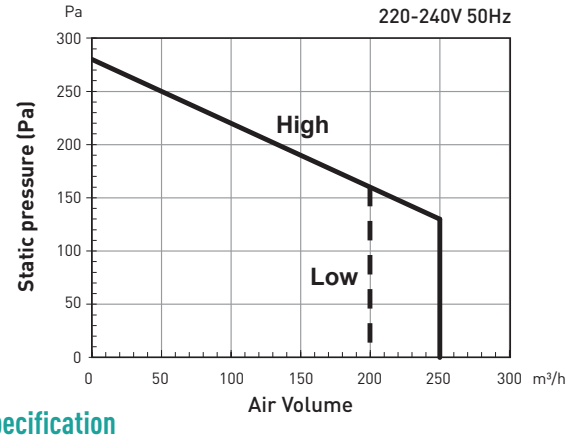

Specification

Voltage			Air Volume		Consumption	Noise	Weight	Duct Size
[V]	[Hz]		[m³/h]	[CFM]	[W]	[dB(A)]	[kg]	[mm]
220 - 240	50	Hi	250	147	22	29	8.1	Ø150
		Lo	200	118	14	27		

Test Condition

- Air volume, electric characteristic and noise are specified at the static pressure of 0 Pa
- The value of noise level is the weighted average sound pressure level and the mean values are measured by our company, within +3 to -7 dB tolerance
- The value of noise level are measured at 1.5 m apart from the side of the fan body when ducts are connected on both inlet and outlet
- The value of air volume are the mid-points results measured by our company, within ±10% tolerance

- All information contained in this leaflet is correct at the time of printing, and is subject to change withour prior notice.
- Images are for illustration purpose only.
- Due to printing considerations, the actual color may vary slightly from those shown.
- Panasonic Malaysia Sdn. Bhd. reserves the right to revise any content in this catalogue as it deems fit without prior notice.

Panasonic Malaysia Sdn Bhd Registration No. 197601000977 (26975-W)
Customer Care Centre: Tel: 03-7953 7600 (Mon to Fri: 9am-5pm)
Lot 10, Jalan 13/2, 46200 Petaling Jaya, Selangor Darul Ehsan. E-mail: ccc@my.panasonic.com www.panasonic.com.my

Panasonic

04.21